SCHEMATIC	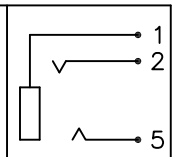
MODEL NO	X

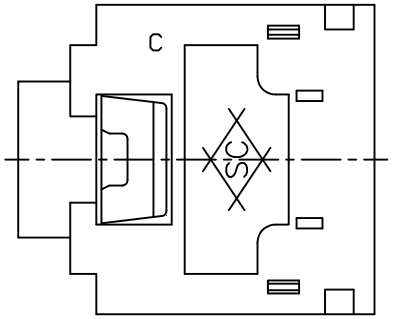

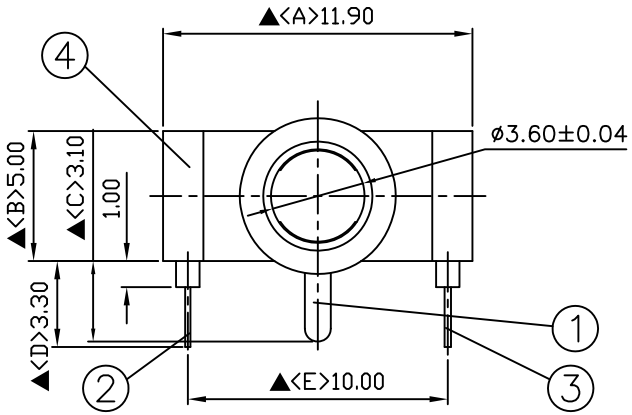

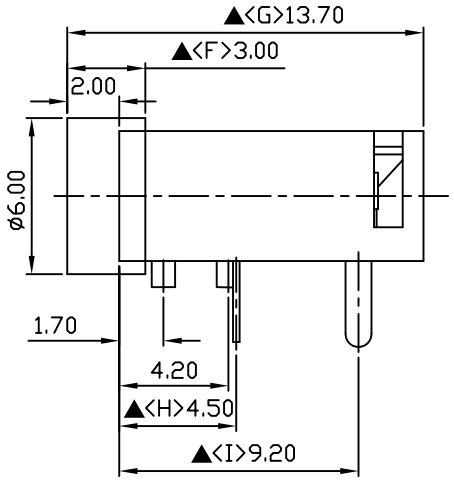

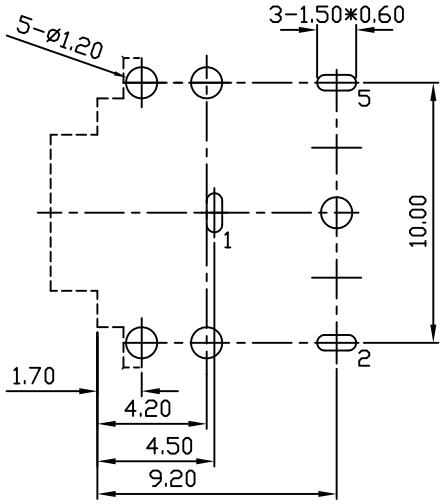

Pin Hole Layout
(Jack Bottom View)

NO.	Description	Material	Q'TY	Finish
4.	Housing	PBT+15%	1	Black Color
3.	Tip Spring	0.25T Phosphor Copper	1	Silver Plated
2.	Ring Spring	0.2T Phosphor Copper	1	Silver Plated
1.	Earth Terminal	0.25T Phosphor Copper	1	Silver Plated

S.C. PRECISION INDUSTRIAL CO., LTD.

DATE	DWN	CHKD	APVD	MANAGER
11.19.2021	王平華			

PART NAME: 3.5ø PHONE JACK | PART NUMBER: SCJ355P00XS0B00G | VERSION:5.0

TOLERANCE :±0.3mm UNLESS OTHERWISE SPECIFIED | UNIT:mm | SCALE:1/1

For Redference
僅供參考

RoHS&SVHC
Compliant

SPECIFICATIONS:
Contact Resistance : 30mΩ max
Insulation Resistance : 100MΩ min. at DC 500V
Dielectric Withstand Voltage : AC 500V for one minute
Remark: ▲: The Most Important Dimension